FUP390
Spare parts catalogue

Duun Industrier as
7630 Åsen, Norway
www.duun.no

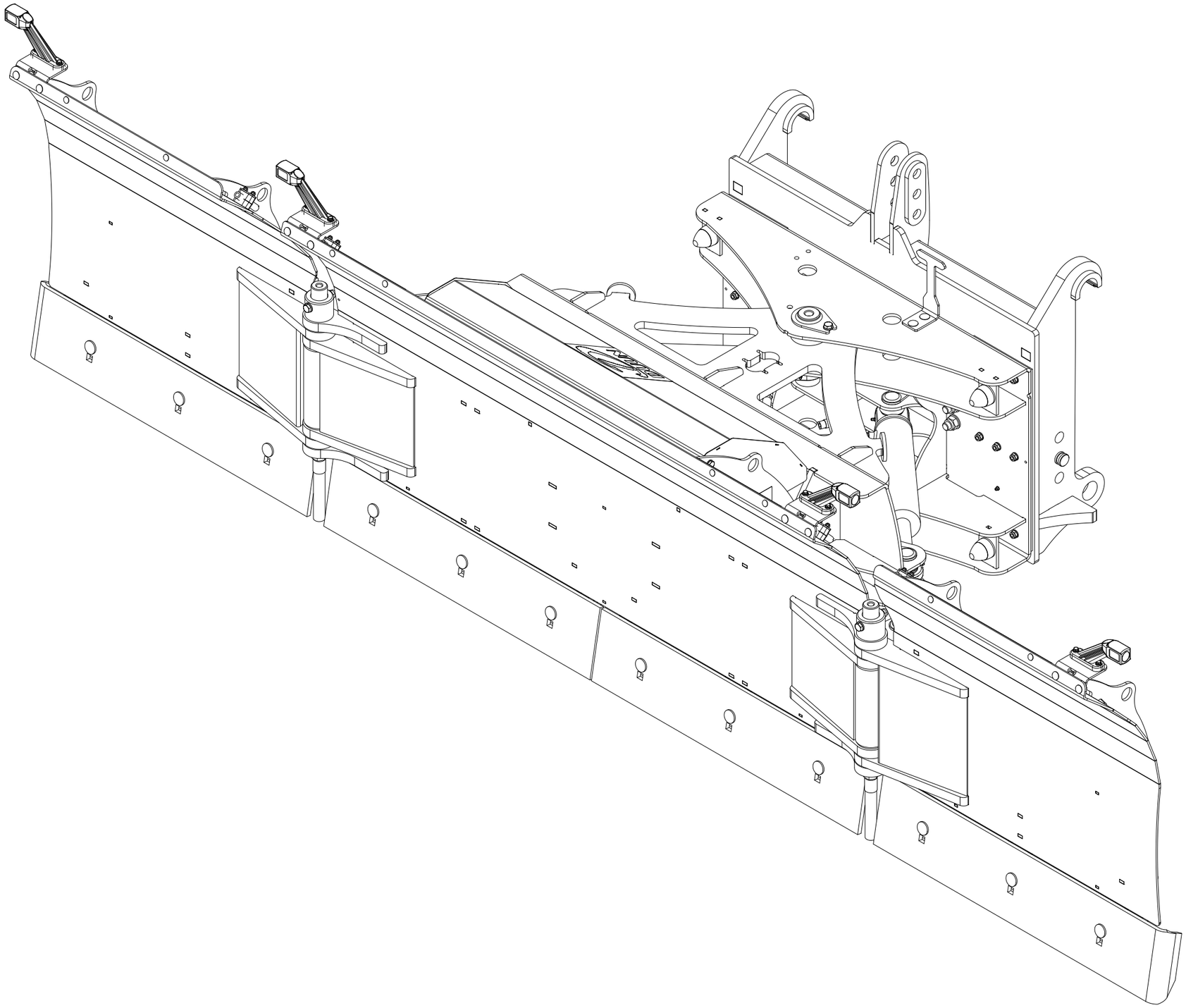

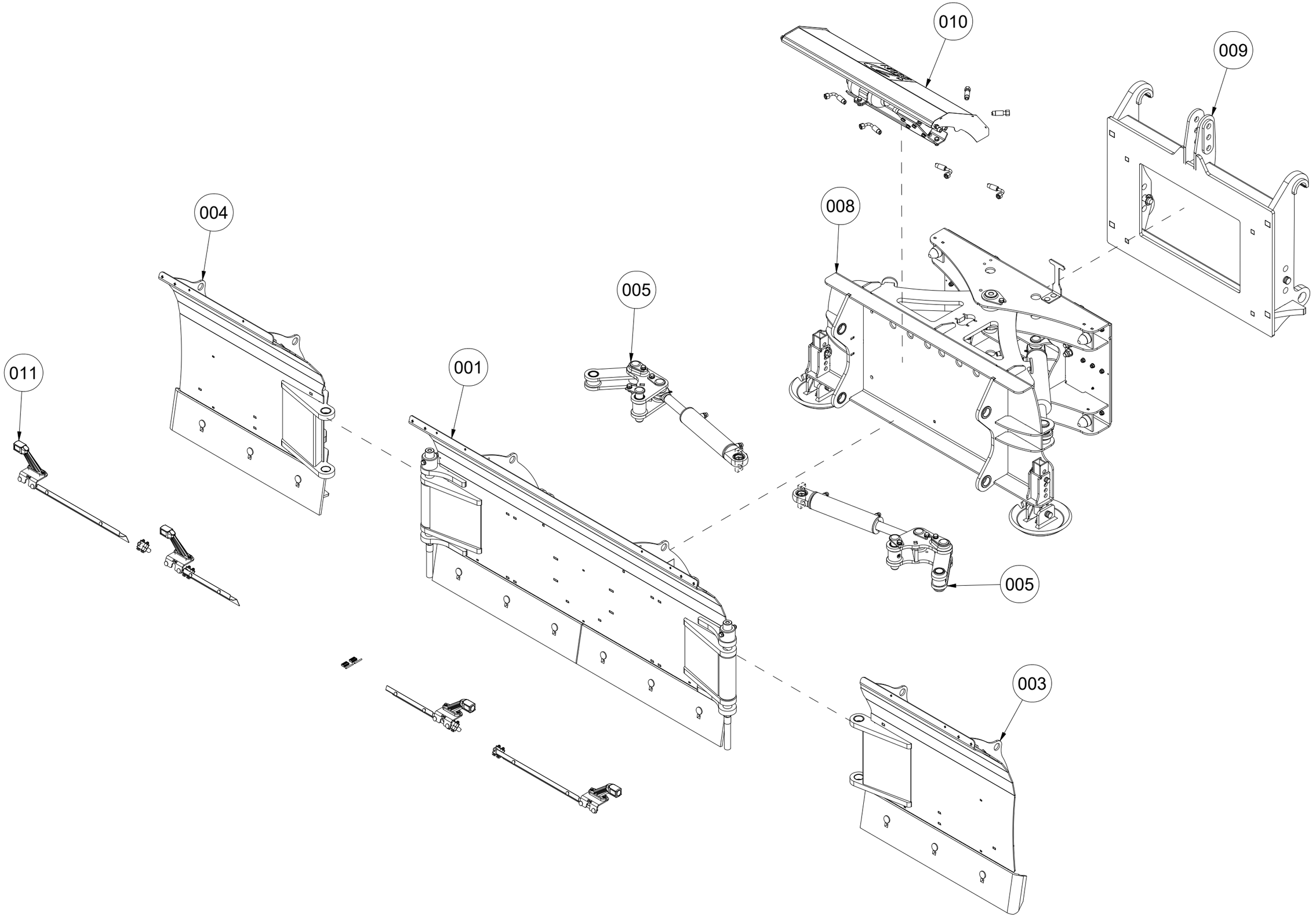
010
009
004
008
011
001
005
005
003

001 The main blade FUP390

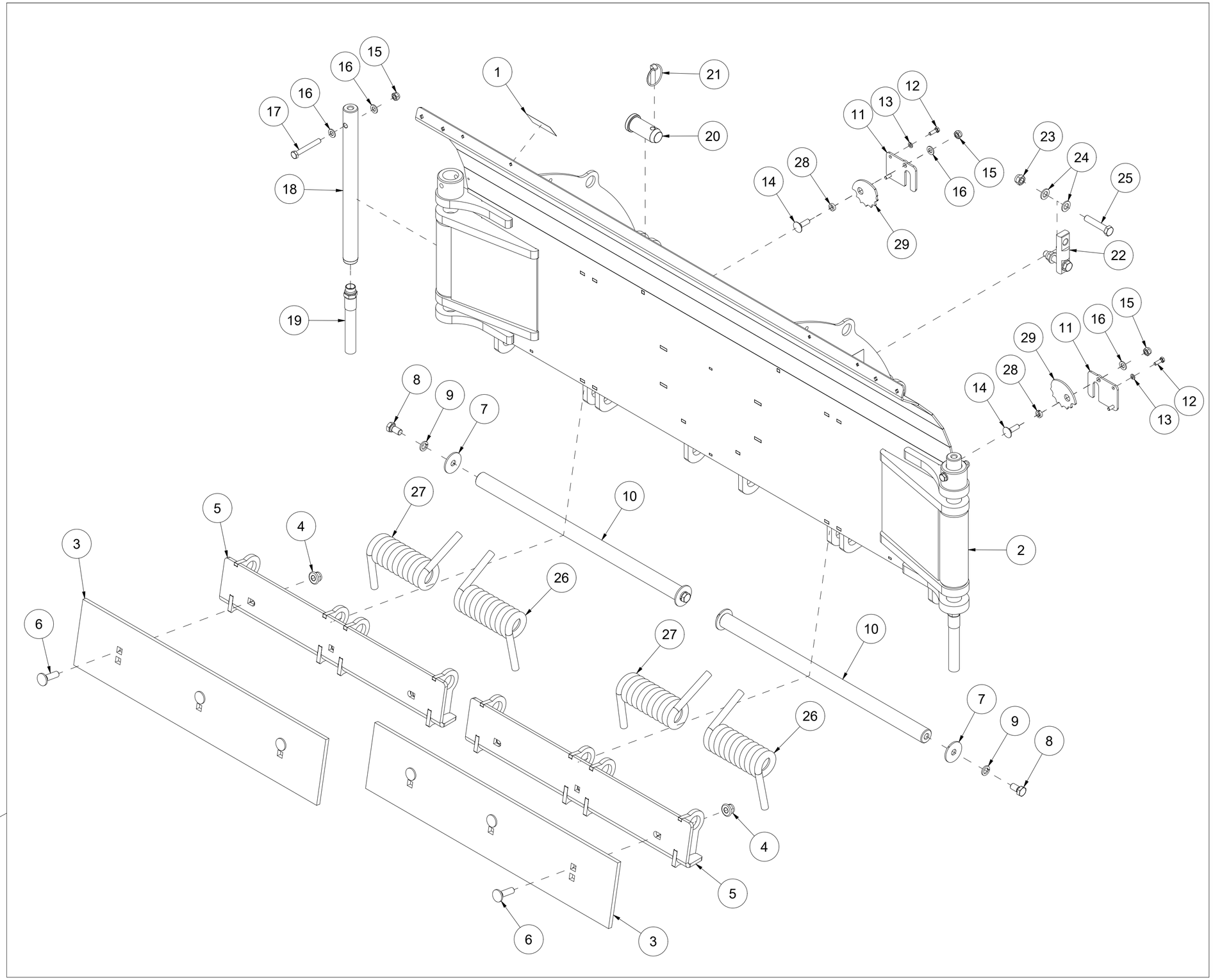

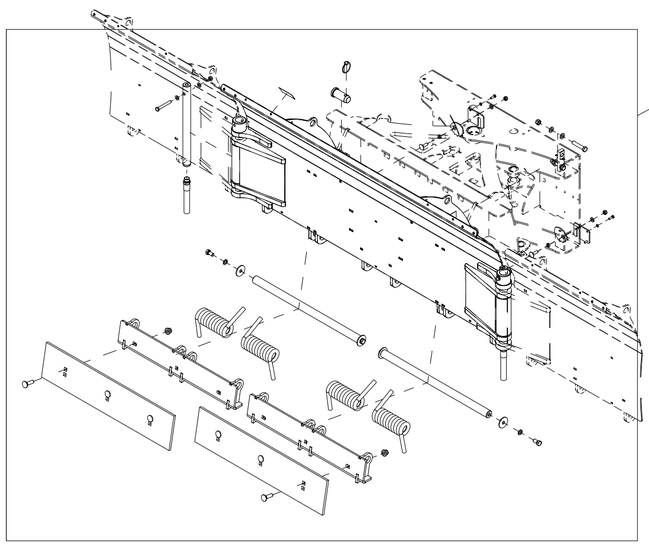

Pos	Qty	Article no	Designation
1	2	2935088	Adhesive label 90x48 Hand pinch hazard
2	1	24101010	The main blade L1896 v2
3	2	2112226	Flat wear steel 12x200x915
4	6	2489175	Locking nut with flange M16 ElZn DIN 6926
5	2	24101013	Give away plate of the main blade L830
6	6	2343494	Locking screw M16x55 St 12.9
7	4	23521053	Washer Ø17/60x4
8	4	2422485	Hexagon screw M16x30 ElZn 8.8 DIN 933
9	4	2534078	Spring washer M16 ElZn DIN 127
10	2	24101064	Shaft for spring releaser Ø40x738
11	4	24101027	Lid for spring tensioner
12	8	2422246	Hexagon screw M8x25 ElZn 8.8 DIN 933
13	8	2534047	Spring washer M8 ElZn DIN 127
14	4	2344352	Locking screw M12x40 ElZn 8.8 DIN 603
15	6	2483611	Locking nut M12 ElZn DIN 985
16	8	2531069	Washer M12 ElZn DIN 125
17	2	2422364	Hexagon screw M12x90 ElZn 8.8 DIN 931
18	2	24101069	Hinge bolt Ø40x498
19	2	24101070	Scraper L195
20	4	24101033	Fastening bolt Ø40x90
21	4	2556145	Linch pin Ø12x50
22	2	24101026	Cylinder attachment bolt
23	4	2483613	Locking nut M16 ElZn DIN 985
24	8	2531078	Washer M16 ElZn DIN 125
25	4	2422500	Hexagon screw M16x80 ElZn 8.8 DIN 931
26	2	24201042	Spring for shear trigger Ø19 L224 VV
27	2	24201043	Spring for shear trigger Ø19 L224 HV
28	4	41311076	Washer Ø12,2/20x6
29	4	24101114	Spring tensioner v2

003 Left side wing FUP390

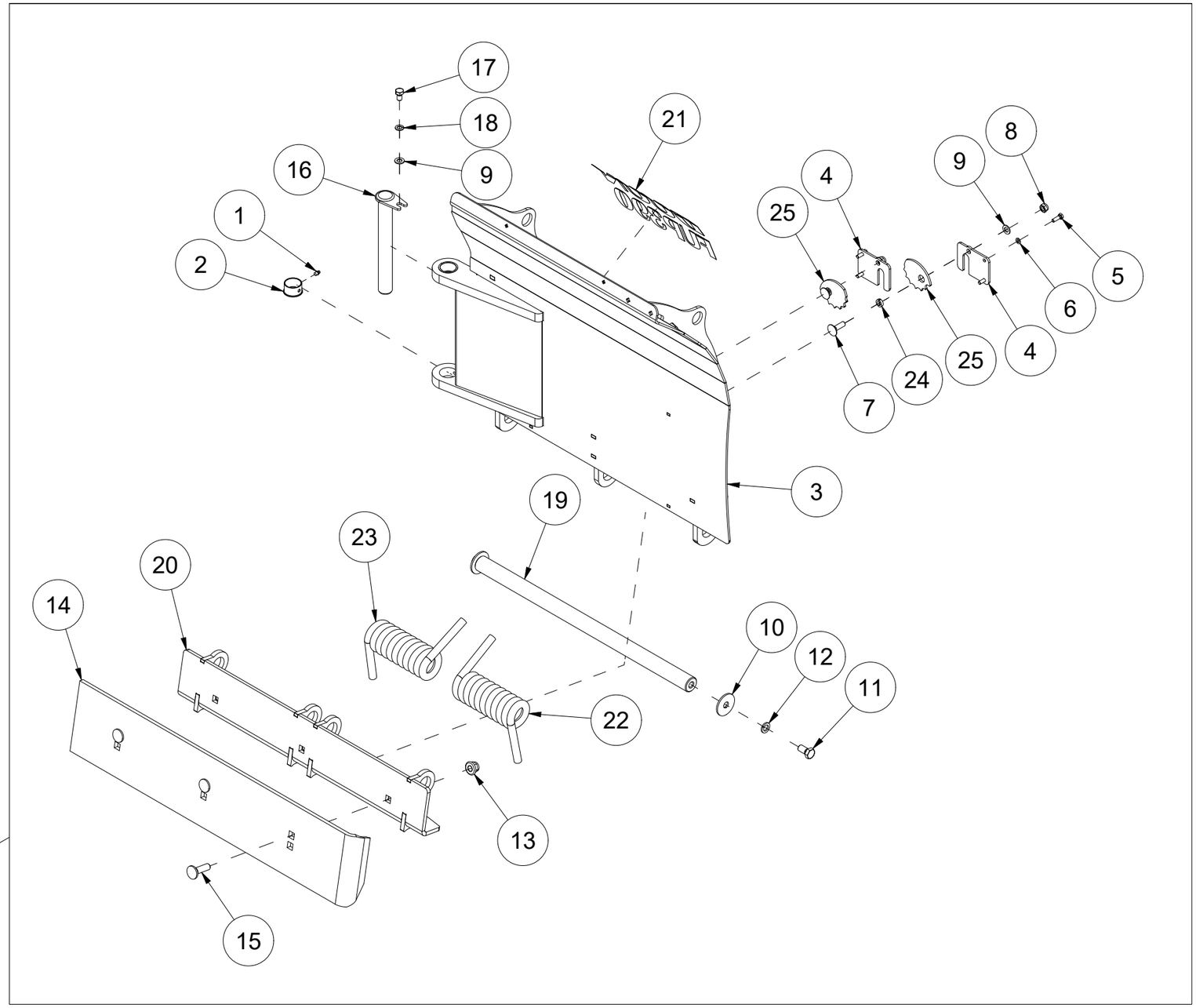

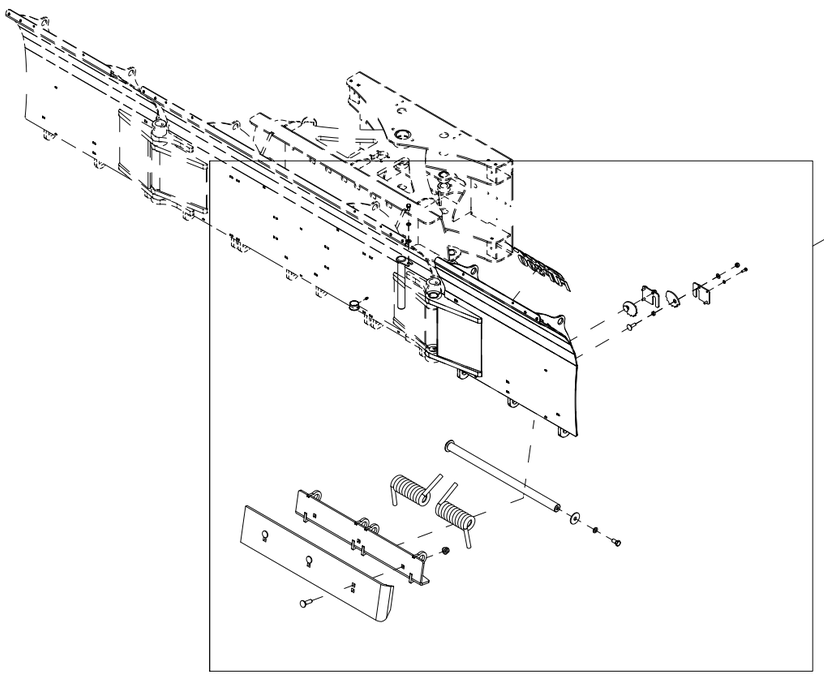

Pos	Qty	Article no	Designation
1	2	2478407	Grease nipple, Straight M8
2	2	2245252	Bushing with flange Ø40/44x25
3	1	24102100	Left side wing L1265 v2
4	2	24101027	Lid for spring tensioner
5	4	2422246	Hexagon screw M8x25 ElZn 8.8 DIN 933
6	4	2534047	Spring washer M8 ElZn DIN 127
7	2	2344352	Locking screw M12x40 ElZn 8.8 DIN 603
8	2	2483611	Locking nut M12 ElZn DIN 985
9	3	2531069	Washer M12 ElZn DIN 125
10	2	23521053	Washer Ø17/60x4
11	2	2422485	Hexagon screw M16x30 ElZn 8.8 DIN 933
12	2	2534078	Spring washer M16 ElZn DIN 127
13	3	2489175	Locking nut with flange M16 ElZn DIN 6926
14	1	2112247	Wear steel 12x200x965 Endebøy
15	3	2343494	Locking screw M16x55 St 12.9
16	1	24101054	Bolt Ø35x302
17	1	2422344	Hexagon screw M12x20 ElZn 8.8 DIN 933
18	1	2534069	Spring washer M12 ElZn DIN 127
19	1	24102104	Shaft for spring releaser Ø40x754
20	1	24102103	Give away plate of the side wing L861
21	1	2935212	Adhesive label FUP390 341x200
22	1	24201042	Spring for shear trigger Ø19 L224 VV
23	1	24201043	Spring for shear trigger Ø19 L224 HV
24	2	41311076	Washer Ø12,2/20x6
25	2	24101114	Spring tensioner v2

004 Right side wing FUP390

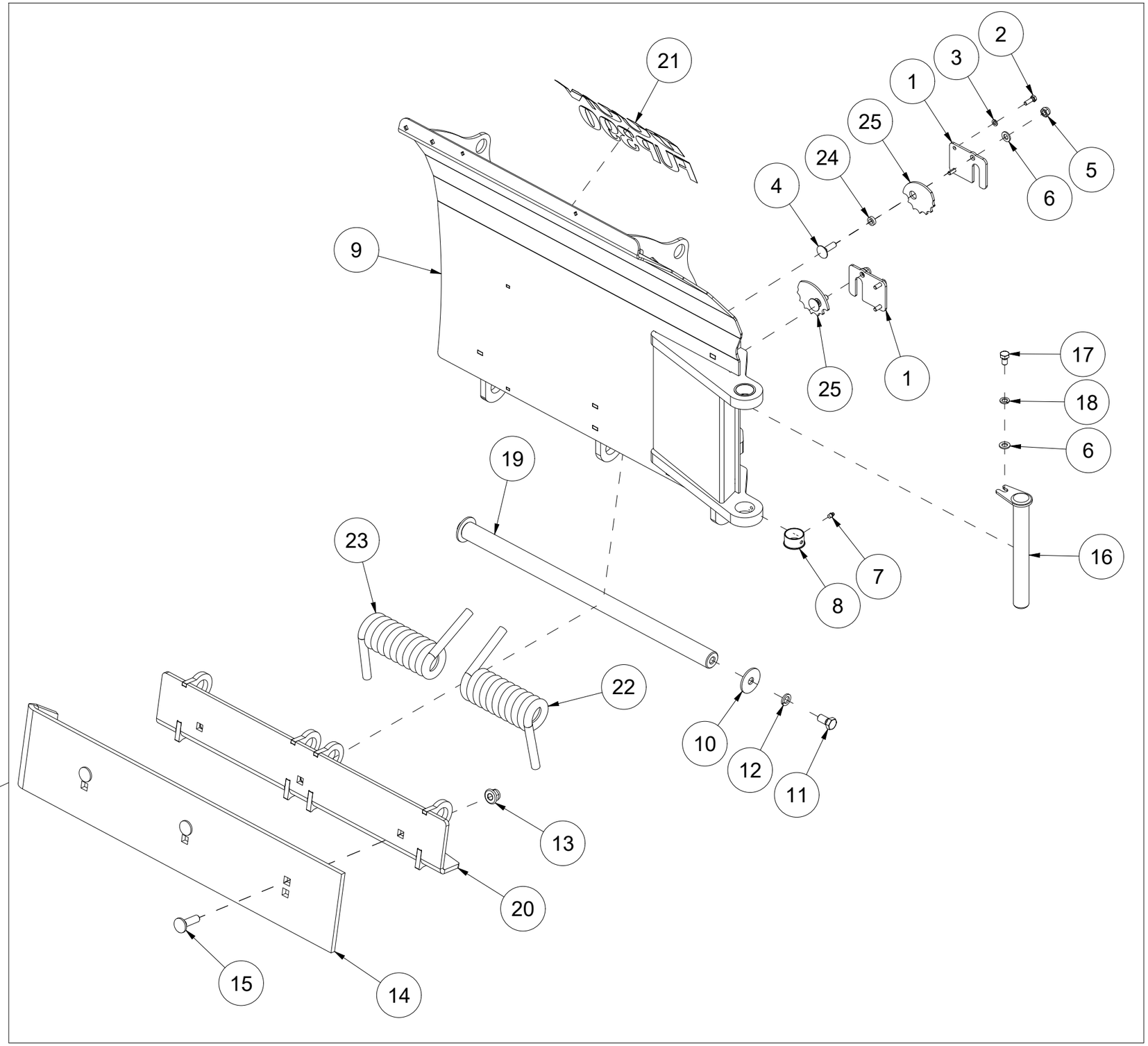

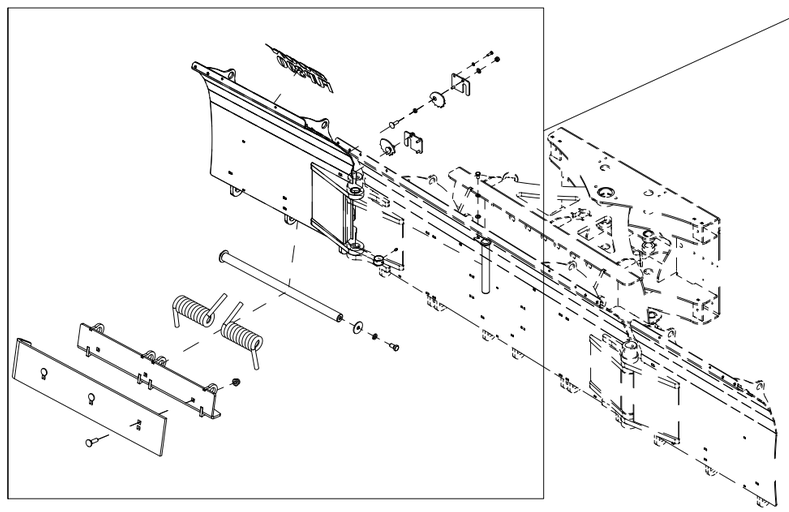

Pos	Qty	Article no	Designation
1	2	24101027	Lid of spring tensioner
2	4	2422246	Hexagon screw M8x25 ElZn 8.8 DIN 933
3	4	2534047	Spring washer M8 ElZn DIN 127
4	2	2344352	Locking screw M12x40 ElZn 8.8 DIN 603
5	2	2483611	Locking nut M12 ElZn DIN 985
6	3	2531069	Washer M12 ElZn DIN 125
7	2	2478407	Grease nipple, Straight M8
8	2	2245252	Bushing with flange Ø40/44x25
9	1	24102102	Right side wing L1265 v2
10	2	23521053	Washer Ø17/60x4
11	2	2422485	Hexagon screw M16x30 ElZn 8.8 DIN 933
12	2	2534078	Spring washer M16 ElZn DIN 127
13	3	2489175	Locking nut with flange M16 ElZn DIN 6926
14	1	2112247	Wear steel 12x200x965 Endebøy
15	3	2343494	Locking screw M16x55 St 12.9
16	1	24101054	Bolt Ø35x302
17	1	2422344	Hexagon screw M12x20 ElZn 8.8 DIN 933
18	1	2534069	Spring washer M12 ElZn DIN 127
19	1	24102104	Shaft release spring Ø40x754
20	1	24102103	Give away plate of the side wing L861
21	1	2935212	Adhesive label FUP390 341x200
22	1	24201042	Spring for shear trigger Ø19 L224 VV
23	1	24201043	Spring for shear trigger Ø19 L224 HV
24	2	41311076	Washer Ø12,2/20x6
25	2	24101114	Spring tensioner v2

005 Mechanism of side wing 180° FUP390

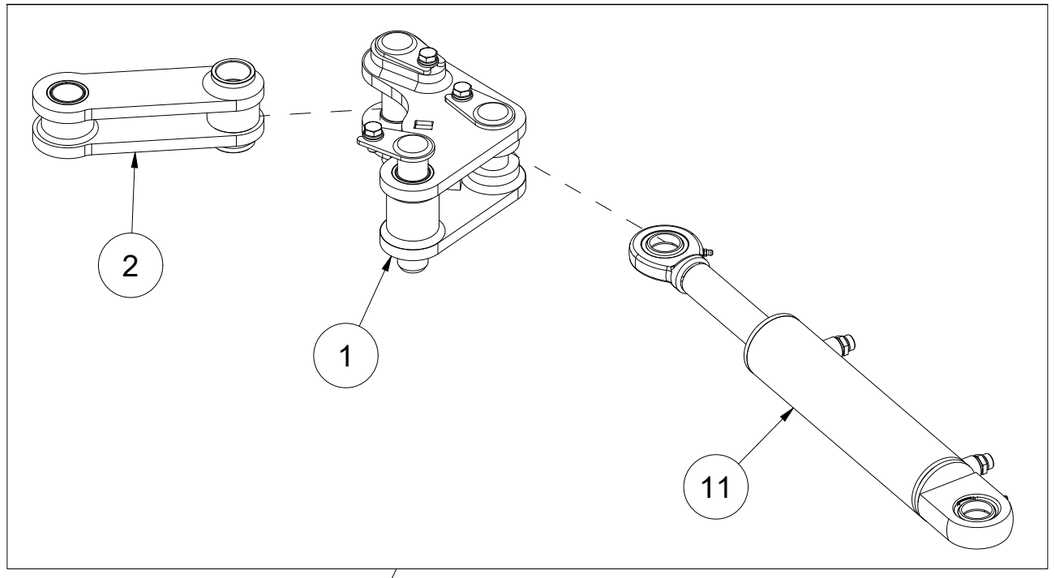

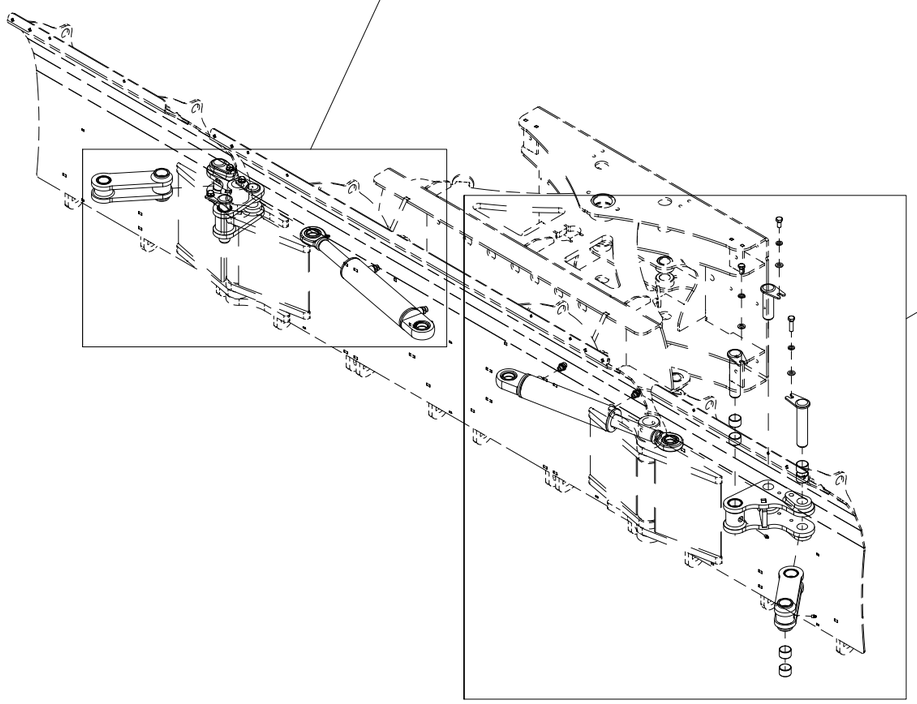

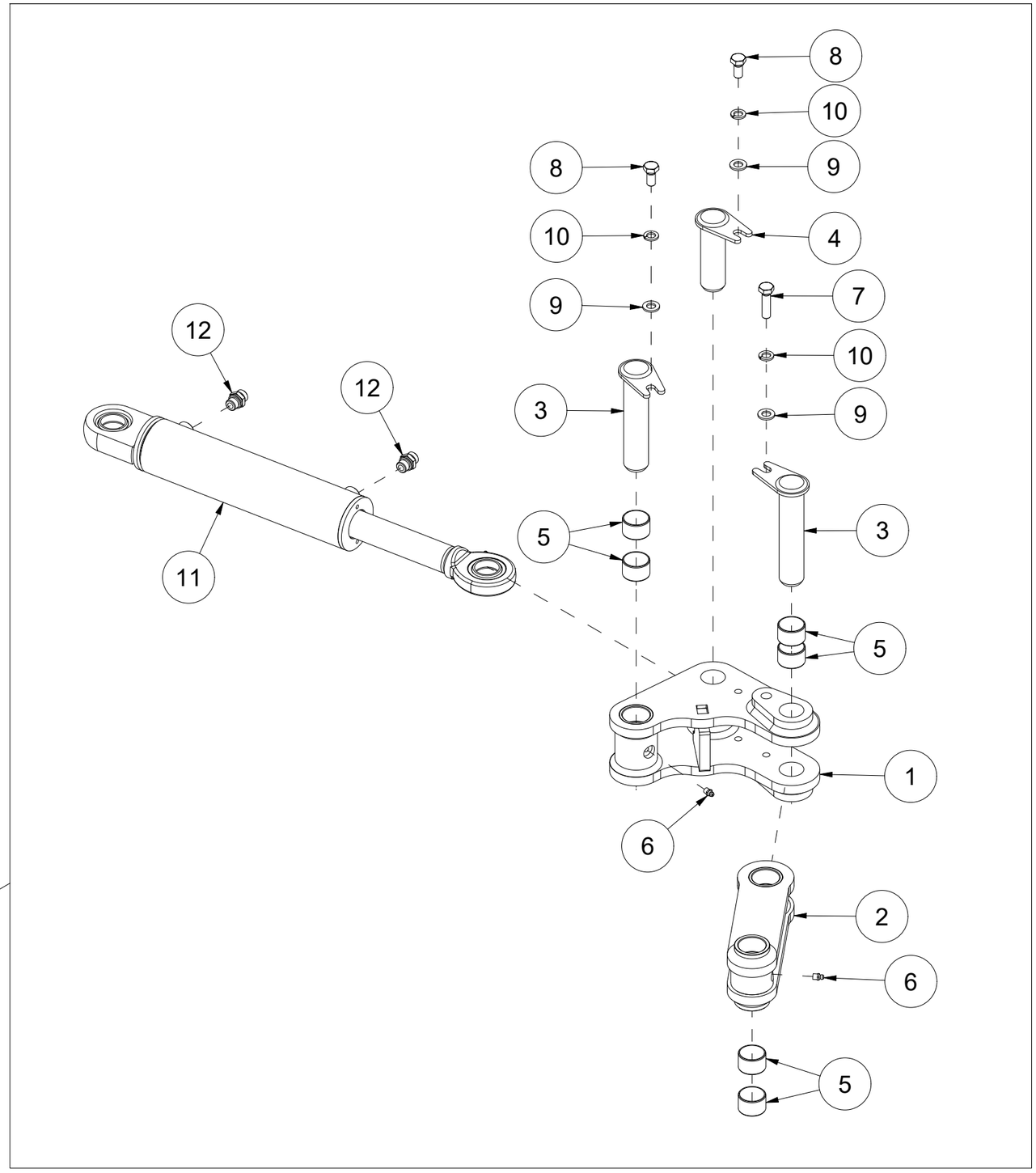

Pos	Qty	Article no	Designation
1	2	24101051	Connection handle
2	2	24101052	Link
3	4	24101053	Bolt Ø35x162
4	2	24101020	Bolt Ø35x112
5	12	2245251	Bushing Ø35/39x25
6	6	2478407	Grease nipple, Straight M8
7	2	2425354	Hexagon screw M12x45 ElZn 8.8 DIN 933
8	4	2422346	Hexagon screw M12x25 ElZn 8.8 DIN 933
9	6	2531069	Washer M12 ElZn DIN 125
10	6	2534069	Spring washer M12 ElZn DIN 127
11	2	2955009	Cylinder 70/40x250 I35I35 L485 RAL9005
12	4	2957749	Hexagon nipple GEK BSP 3/8" L12 ED

008 Swivel module FUP390

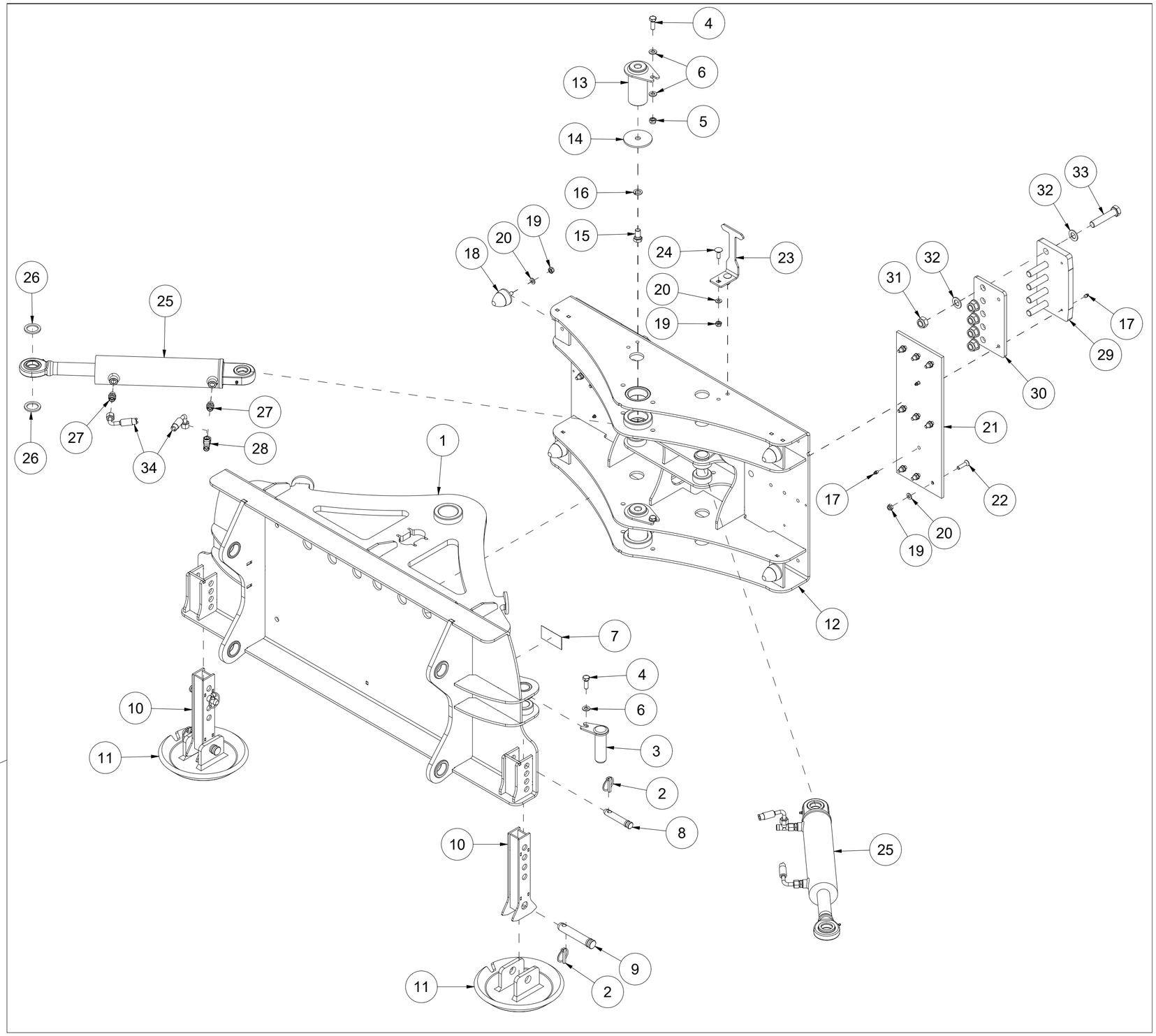

Pos	Qty	Article no	Designation
1	1	24101008	External swing module
2	4	2556142	Linch pin Ø10x40
3	4	24101020	Bolt Ø35x112
4	6	2422350	Hexagon screw M12x35 ElZn 8.8 DIN 933
5	6	2483611	Locking nut M12 ElZn DIN 985
6	12	2531069	Washer M12 ElZn DIN 125
7	2	2935088	Adhesive label 90x48 Hand pinch hazard
8	2	2526321	Top strut bolt cat. 1 Ø19x70
9	2	2526326	Top strut bolt cat. 2 Ø25,4x103
10	2	24101075	Bracket
11	2	24101074	Skid pad
12	1	24101009	Inner swing module
13	2	24101056	Bolt Ø60x118
14	2	24101057	Washer Ø17/90x5
15	2	2422485	Hexagon screw M16x30 ElZn 8.8 DIN 933
16	2	2534078	Spring washer M16 ElZn DIN 127
17	8	2478407	Grease nipple, Straight M8
18	4	2225110	Rubber damper Ø52X58 M10
19	24	2483610	Locking nut M10 ElZn DIN 985
20	24	2531060	Washer M10 ElZn DIN 125
21	2	24101049	Sliding rail 200x540x10
22	18	2472303	Unbrako countersunk head screw M10x40 ElZn 10.9 DIN 7991
23	1	24101079	Marker
24	2	2344331	Locking screw M10x30 ElZn 8.8 DIN 603
25	2	2955008	Cylinder Ø80/40 SL250
26	8	24101060	Washer Ø36/50,7x4
27	4	2957749	Hexagon nipple GEK BSP 3/8" L12 ED
28	2	2957723	T-hexagon nipple EVLK 12L
29	2	24101040	Fastening plate
30	2	24101048	Sliding rail 135x200x10
31	10	2483615	Locking nut M20 ElZn DIN 985
32	20	2531086	Washer M20 ElZn DIN 125
33	10	2422583	Hexagon screw M20x100 ElZn 8.8 DIN 931
34	2	2958378	Hydraulic hose 3/8" L800

009 Coupling frame FUP390

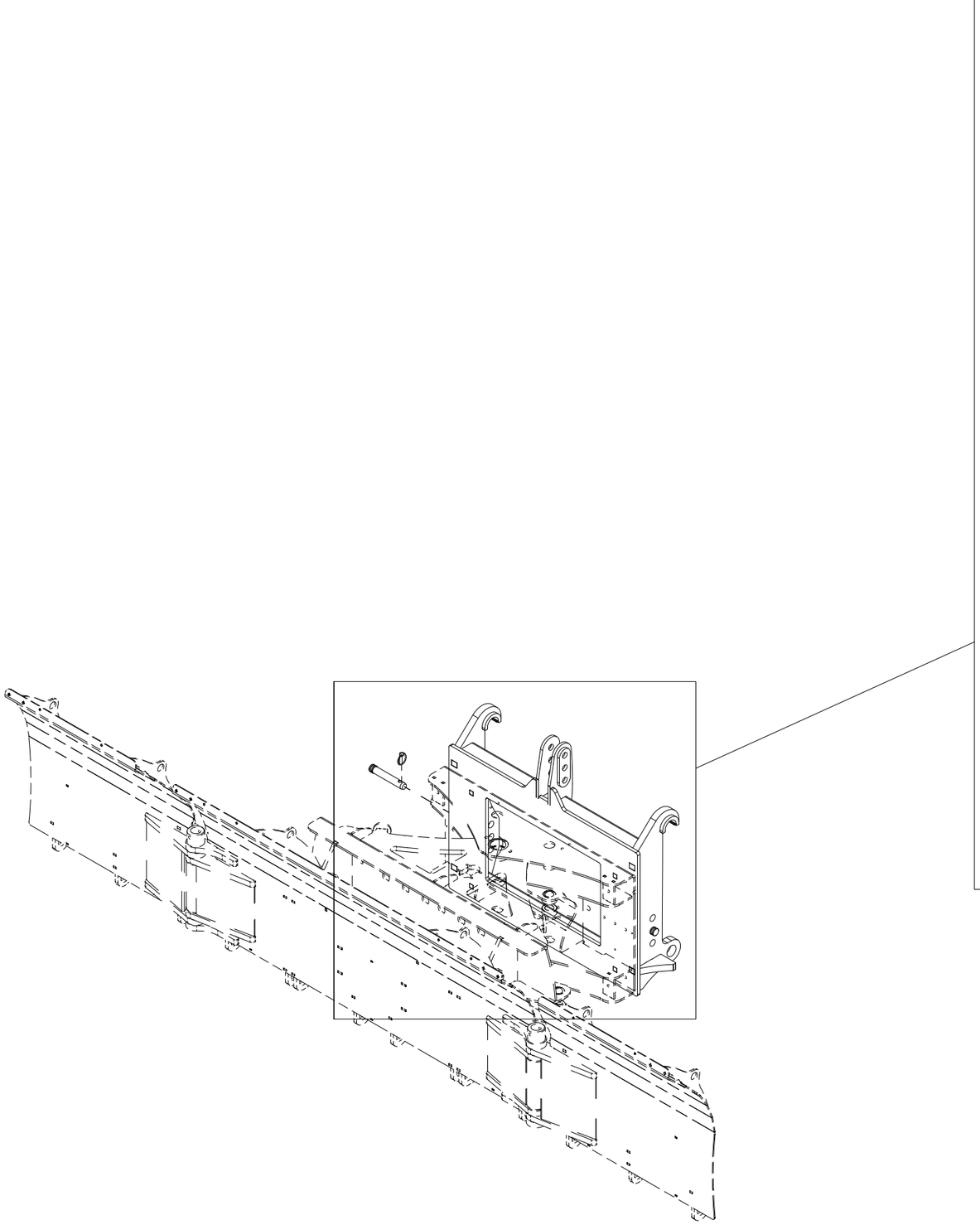

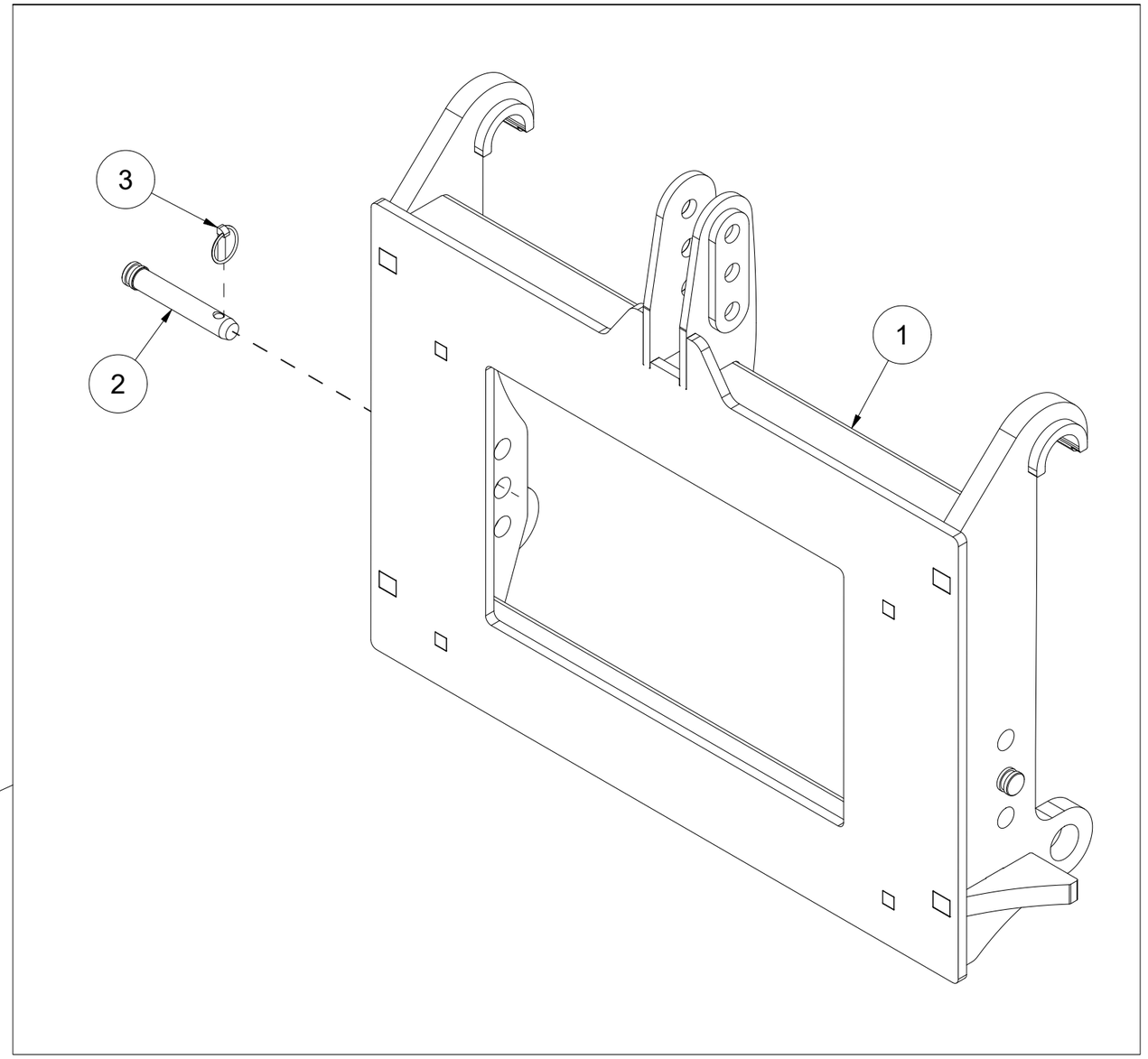

Pos	Qty	Article no	Designation
1	1	24101046	Coupling frame
2	2	2551732	Drawbar bolt cat. 2 Ø28x134
3	2	2556142	Linch pin Ø10x40

010 Accumulators FUP390 v2

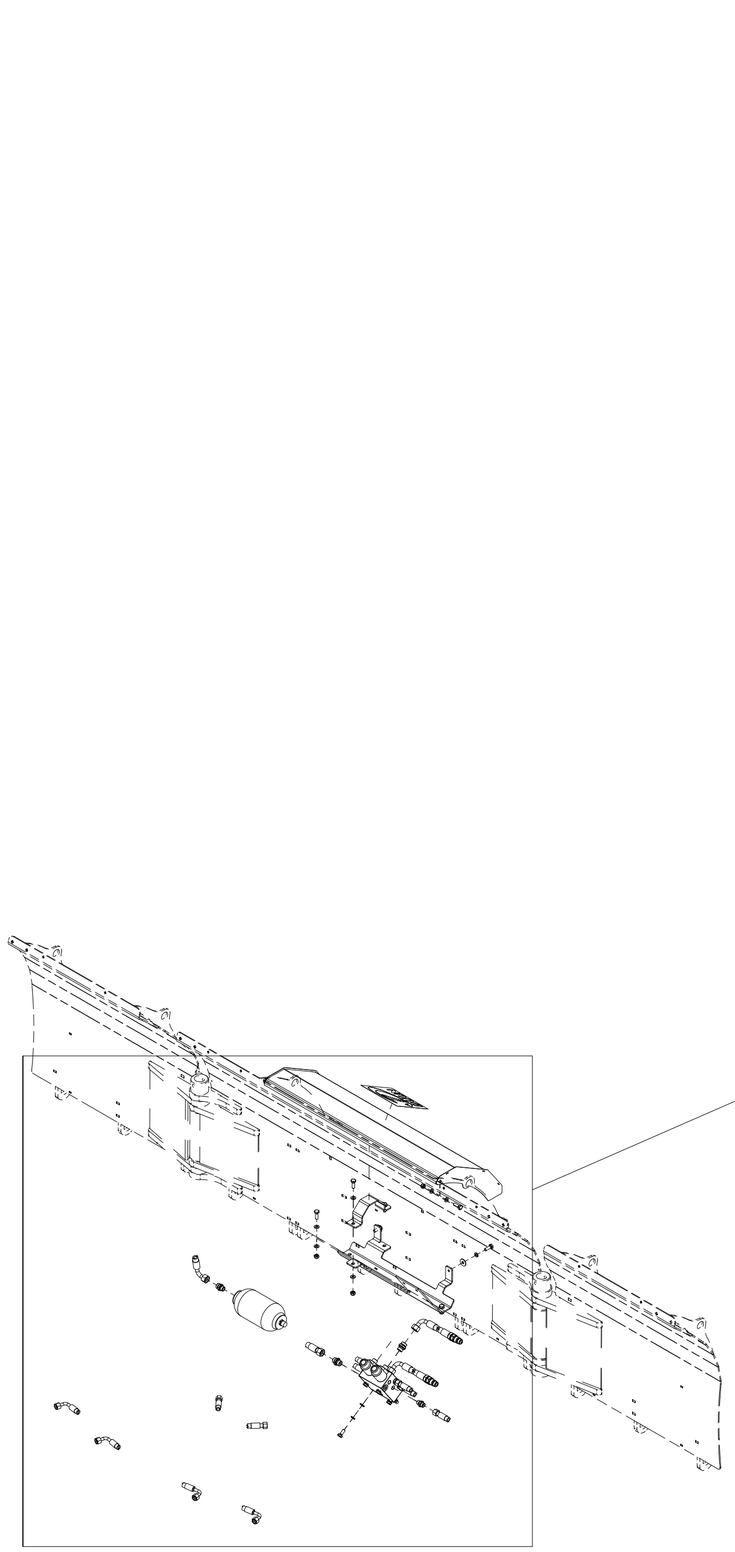

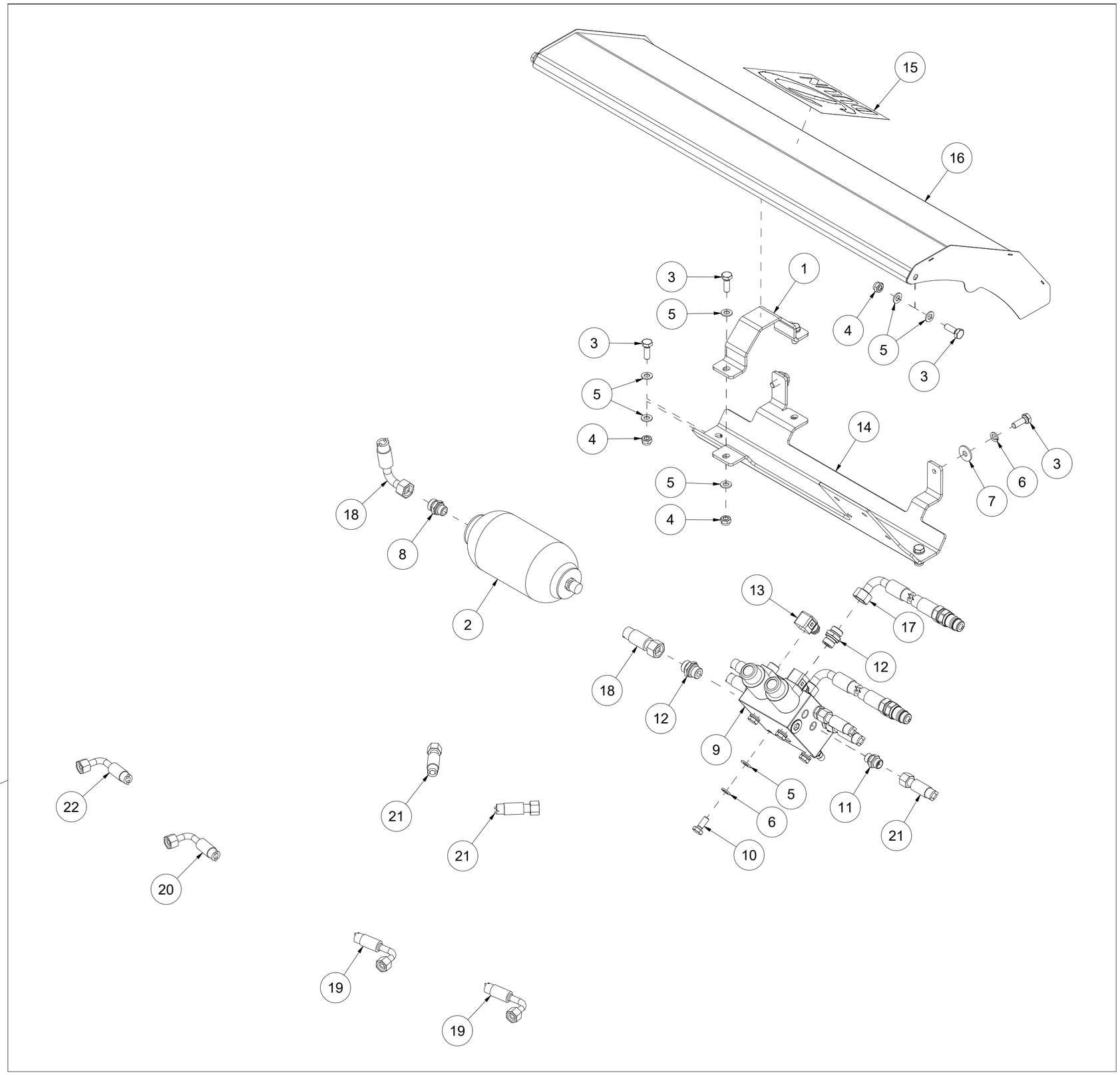

Pos	Qty	Article no	Designation
1	1	24101025	Clamps
2	1	2955310	Accumulator 1,4l TS rotation
3	8	2422299	Hexagon screw M10x30 ElZn 8.8 DIN 933
4	6	2483610	Locking nut M10 ElZn DIN 985
5	16	2531060	Washer M10 ElZn DIN 125
6	6	2534060	Spring washer M10 ElZn DIN 127
7	2	2533060	Body washer M10 ElZn DIN 9021
8	1	2957736	Hexagon nipple GEK M18x1,5 L15 ED
9	1	2955386	Hydraulic valve u-plough
10	4	2422297	Hexagon screw M10x25 ElZn 8.8 DIN 933
11	6	2957749	Hexagon nipple GEK BSP 3/8" L12 ED
12	3	2957768	Hexagon nipple GEK BSP 1/2" L15 ED
13	2	2957402	DIN Plug 12/24VV 5,0m LED
14	1	24101073	Bracket v3
15	1	2935151	Adhesive label Duun 200x200
16	1	24101072	Cover v2
17	2	2958180	Hydraulic hose 1/2" L3250
18	1	2958518	Hydraulic hose 1/2" L560
19	2	2958376	Hydraulic hose 3/8" L670
20	1	2958377	Hydraulic hose 3/8" L900
21	2	2958379	Hydraulic hose 3/8" L1300
22	1	2958383	Hydraulic hose 3/8" L1100

011 Lights package v2 FUP390

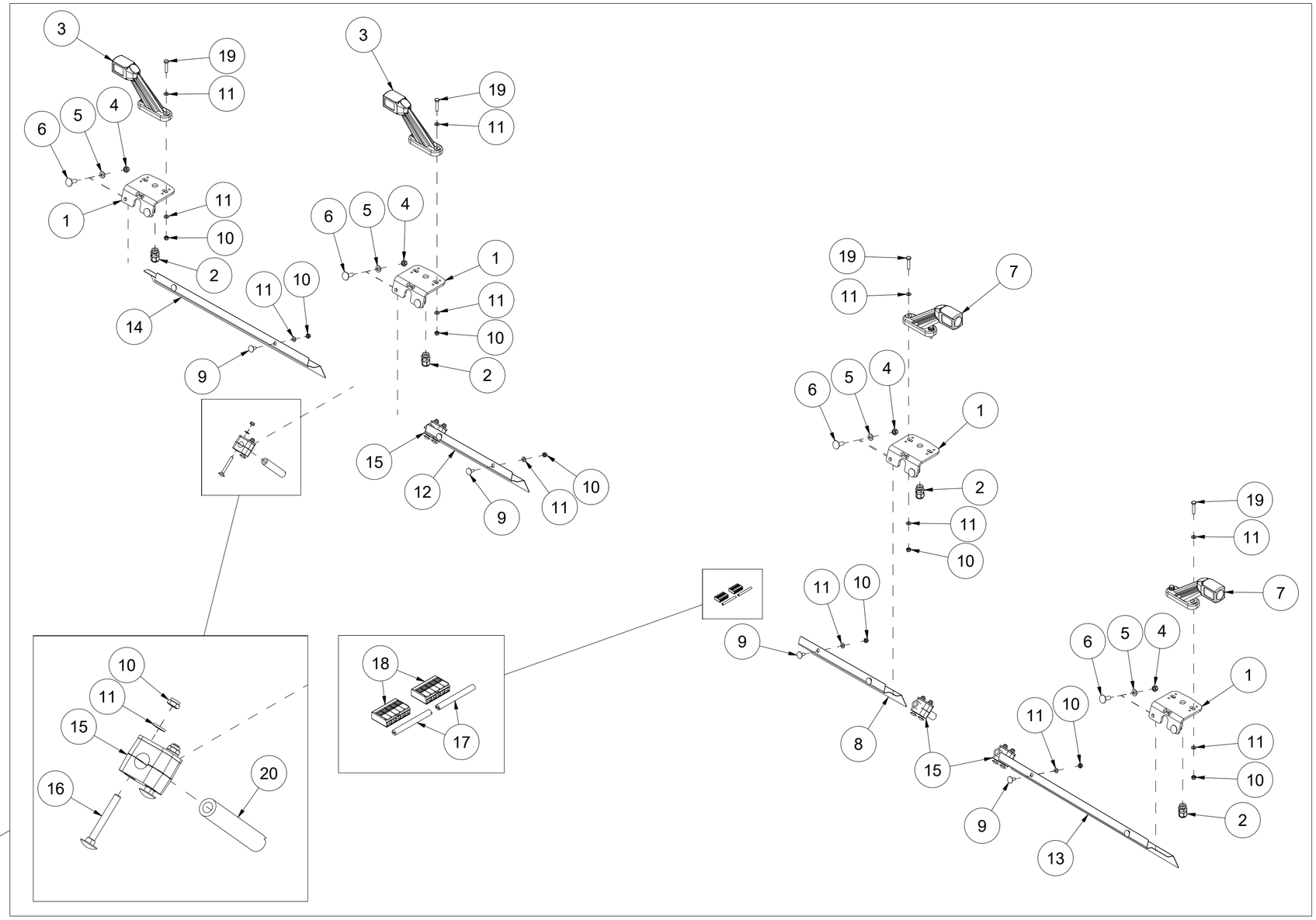

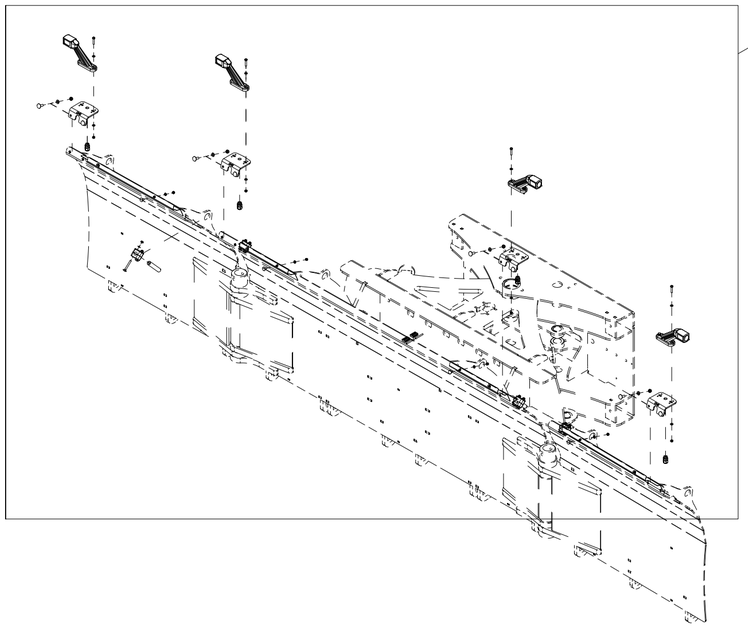

Pos	Qty	Article no	Designation
1	4	24101035	Light bracket
2	4	4127613	Nipple with strain relief M16
3	2	4421037	Right horizontal LED marker light 12/24V
4	8	2483609	Locking nut M8 ElZn DIN 985
5	8	2531047	Washer M8 ElZn DIN 125
6	8	2344246	Locking screw M8x25 ElZn 8.8 DIN 603
7	2	4421036	Left horizontal LED marker light 12/24V
8	1	24101082	The main blade wiring cover L331 VS
9	8	2441200	Locking screw M6x16 ElZn 8.8 DIN 603
10	24	2483608	Locking nut M6 ElZn DIN 985
11	32	2531039	Washer M6 ElZn DIN 125
12	1	24101083	The main blade wiring cover L331 HS
13	1	24102110	Cable cover - Left wing L591
14	1	24102111	Cable cover - Right wing L591
15	4	4251210	Hose holder Ø15x1
16	8	2441217	Locking screw M6x50 ElZn 8.8 DIN 603
17	1	24101087	Cable 2x0,75 L3700
18	2	4124205	Connection clamp 5p 4mm2
19	8	2422209	Hexagon screw M6x30 ElZn 8.8 DIN 931
20	2	24101086	Hose 3/8 R1T